DELTA® HOISTING EQUIPMENT

DELTA®

OPERATIONS MANUAL

DELTA ELECTRIC CHAIN HOIST 400 VOLT
[DH.0.DEH series]
WITH TROLLEY
[DH.0.DEY (push) & DH.0.DED series (electric)]

DH.0.DEH

DH.0.DEY (push) DH.0.DED (electric)

CE

NOTE:	All of the information reported herein is based on data available at the moment of printing. We reserve the right to modify our own products at any moment without notice. Please read the operating instructions carefully before using this product. Always keep a copy of this instruction manual at hand. Failure to read and comply with the contents of this manual can result in serious body injury or death, and property damage.
⚠	**THIS IS THE SAFETY ALERT SYMBOL. WHEN YOU SEE THIS SYMBOL ON YOUR DELTA® PRODUCTS OR IN THIS MANUAL, BE ALERT FOR DANGEROUS SITUATIONS. FOLLOW RECOMMENDED AND SAFE OPERATING INSTRUCTIONS AT ALL TIMES.**

If any doubt remains, please contact your supplier.

PRECAUTION – SAFETY WARNINGS	
The user of the DELTA® electric chain hoist must always check if guidelines are followed, which you can find in this manual. Also he/she needs to understand the manual and user instructions completely for safety purposes. Please note that if not followed or understood correctly, potential risks are even greater and can lead to severe injuries or equipment damage. Therefore it is always recommended to save this manual correctly, accessible for the any person who is going to use it.	
⚠	**Never use or install DELTA® electric chain hoist before ready and understanding the user manual.**
⚠	**DELTA® electric chain hoist may only be used by qualified personnel of age. Make sure that people who are using this for the first time are familiar with the correct operation instructions and have knowledge about the safety requirements. The user must have a good mental and physical condition.**
⚠	**Never remove the nameplate, operating and warning labels. Do not use this product without.**
⚠	**Do not exceed the rated capacity, which you can find on the nameplate. If not, do not use.**
⚠	**Always make sure that the supporting structures and additional lifting equipment are rated equally or higher to support the rated capacity of DELTA® electric chain hoist.**
⚠	**Before installing, make sure that DELTA® electric chain hoist, load chain, and other components are visibly in good condition. After installing periodically inspect these, to make sure that this is kept. If not, please contact your supplier or another professional.**
⚠	**The ambient temperature of DELTA® electric chain hoist and load must be between -10 °C / + 40 degrees °C**
⚠	**A technical study by a professional must be carried out before installment to prevent any risks.**
⚠	**Make sure that the lifting chain is correctly installed and attached to the bottom hook.**
⚠	**Never use the DELTA® electric chain hoist for lifting, supporting or transporting people.**
⚠	**Never lift loads over or in close proximity of people.**
⚠	**Always inform the surroundings that the lifting procedure is going to start. Make sure that no obstacles are in between the hoist and the load.**
⚠	**People may never walk under the suspended load or stand in close proximity. (Danger zone) Never let people stand near the load. Make it clear. Never lift load unattended.**
⚠	**Maintenance and repairs must be done by professionals and qualified companies. Always use DELTA® spare parts. Always make sure to keep a journal.**
⚠	**Never operate a damaged or malfunctioning DELTA® electric chain hoist. Always re-test the electric chain hoist after reparation.**
If you have any questions ,please contact your supplier.	

CONTENTS

INTRODUCTION

DELTA® electric chain hoist are designed for vertical lifting in a safe working environment. The user is responsible for correct operation and must always make sure that the load weight doesn't exceed the rated capacity.

DELTA® electric chain hoist are in compliance with the safety factor and further safety requirements in conformity with the European Communities Machinery Directives 2006/42/EC.

Illustrations are for the general understanding and may differ from the actual versions

DELTA® reserve the right to change materials or design, if, in our opinion, such changes will improve our product. For the correct use of the DELTA® electric chain hoist, operation and maintenance instructions must be followed. Abuse, repair by an unauthorized person, or use of non-DELTA® replacement parts voids the guarantee and could lead to dangerous operation.

Please read the instructions carefully before using this product.

1. Mark definition

DELTA® electric chain hoist are designed for lifting load in a vertical direction, which has to be used under normal working conditions. It is strictly forbidden to lift persons. The manual use the below markings to identify the level and grade of danger.

DANGER	Very dangerous situation, if the danger is not avoided, it will cause death or serious injury.
WARNING	Potential dangerous situations, means if the warning is not heeded, it can cause death or serious injury.
CAUTION	Pre-caution needed, if the precaution is not taken, it may cause minor or moderate injury.

According to these instructions, caution markings can also lead to serious injuries. Therefore is important to follow the safety instructions in this manual, but also use common sense when using DELTA® electric chain hoists.

2. Safety instructions

2.1 General rules

Wrong use or lack of maintenance can lead to dangerous situations, which has to be taken seriously during and after use. For example, a dangerous situation as where the load cannot be lowered to a stable and flat underground.

Before installation, operation or maintenance , please read the content of the manual and obey all safety, operation, maintenance instructions.

We will not be responsible for any problems caused by modifications, wrong use, or any other abnormal situation. If the products was not use in nonstandard application, please advise with the local distributor in advance. Also you need to make a risk analysis by a professional to avoid very dangerous situations.

DANGER ⚠

		
It is strictly forbidden to support or transport human beings.	It is not allowed to move objects near people or for people to walk under / be near to suspended load. Always stay clear from the danger zone.	Load may not exceed the rated capacity, always make sure to calculate the weight of the object.
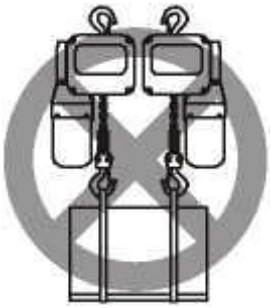		
Forbidden to use multiple hoists with different capacities. Make sure that risk analysis has been carried out.	Forbidden to weld the hook and the lifting chain.	Do not use bolt, screws, screw driver etc. to knot or shorten the lifting chain.

2.2 Check before operation	
CAUTION	This manual is formulated for hoist operators. Before the operator start to work, he should know all the contents of safety and operation instructions. If the products has deformation or cracks problem on the hook, chain, hoist, please do not use, You should contact your dealer and change parts, please do not use any non-spare DELTA® parts.
WARNING	It is strictly forbidden to repair the lifting chain which was installed in the hoist
CAUTION	Lubricate the chain surface with Calcium base grease.
CAUTION	The electric hoist may only be used, when the installation (earth) are correct.
CAUTION	When the lifting chain has twists or knots; do not use the hoist. Replace.
CAUTION	Pre-operational procedure; please make sure to carry out the pre-check instructions as mentioned in the manual.
CAUTION	Asses the weight of the load; select the hoist which is suitable for your application and use the correct rated capacity.
CAUTION	Check the upper hook and bottom hook completely to assure that they have no deformation or loose components. Safety latch must be in place.
CAUTION	Check the hoist for correct functioning, for instance that it stops at the limiter and the brake keeps the load.
CAUTION	Load chain was made by special alloy steel and cannot be weld, refitted or repaired.
CAUTION	When the temperate is below 0°C, check the brake at all times.

2.3 Warnings during operation		
WARNING ⚠		
		
It is strictly forbidden to use the hoist with damaged or cracked load chain	Do not use the chain as heavy duty sling.	Do not lift goods in an angle. Place it directly under the load.
		
Do not place the load on the tip of hook.	Make sure that the load chain does not pass through / against obstacles such as steel plates.	It is not allowed to perform any welding / cutting operations when the load is suspended.
WARNING	Don’t swing suspended goods.	

WARNING	Don’t use hoist which has an abnormal / broken sound.
WARNING	Don’t quickly repeat up and down operation when lifting.
WARNING	Forbidden to leave suspended goods unattended.
WARNING	Please place the load and hook in the centre of the gravity.
CAUTION	Before lifting, calculate the weight.
CAUTION	Make sure that the load chain can operate freely without any obstacles.
2.4 Finished operation	
WARNING	After operation, please make sure the weight is completely resting on a flat service to avoid the load from dropping.
WARNING	When the operation finished, cut off the control pendant in order to avoid wrong operations by others.
2.5 Inspection and maintenance	
CAUTION	Professionals must inspect and maintain the hoist regularly according to the rules in chapter 4 and chapter 5, otherwise, please contact your dealer to inspect and service the hoist.
WARNING	The load chain is made by special alloy steel, do not weld or refit or repair it in any case.
WARNING	It is forbidden to use the hoist which has any problems or obvious signs of damage. Also during maintenance it may not be used. Also do not use the chain hoist with damaged, deformed load chain.

3. Technical data	
3.1 Operation condition and environment	
Temperature operating range:	-10°C ~ +40°C
Relative humidity:	< 85%, this product is not designed for underwater use.
Altitude height	< 1000 m
DELTA® electric chain hoist is not suitable to use in fire, explosion risk or corrosive gas environments , also It cannot be used for lifting melted steel, poisonous, inflammable and explosive goods	

3.2 Technical parameter	
3.2.1 DELTA® electric chain hoist specifications	
Operating voltage	400 V / 50Hz / 3 Phase (440 volt on request)
Lifting speed	Available in double speed
Load chain	Load chain according to EN818-7 Grade DAT
Standard control cable	≈ 6 meter
Standard power cable	≈ 4 meter without plug
Housing protection	IP55
Control protection	IP65
Classification	M5/2m (ISO/FEM)
Duty cycle / starts per hour	40% / 240
Insulation class	F
Operating temperature	- 10°C up to + 40°C
Load type	Only for lifting goods, it may not be used to lift people
Control switch	24 V Pendant control switch with emergency button
Overload protection	Externally adjustable slip clutch and digital protection
Brake	Electromagnetic spring pressure break, holds the load in the event of power failure
DANGER	**Emergency procedure:** In the event of a blocked chain or any other malfunction of DELTA® electric chain hoist, immediately stop the maneuverer without attempting any further actions. Immediately set up a safety perimeter around the hoist and directly under the load to prevent access by any unauthorized persons. Call in the necessary personnel to remove the load and intervene on the hoist.
Limit switch	Electro-mechanical upper and lower limit switch
Thermal protection	Protected through heat sensor

Article code	Capacity (ton)	Speed (m/min)	Load chain Ø	Chain falls	Power Output (kw)	Nett. Weight (kg)	Extra weight per meter chain
DH.0.DEH.001253	0,125	8 / 2	4x12	1	0,4 / 0.1	22	0.4
DH.0.DEH.002503	0.25	8 / 2	4x12	1	0,4 / 0.1	22	0,4
DH.0.DEH.00503	0.5	8 / 2	5x15	1	0.72 / 0.18	33	0,7
DH.0.DEH.01003	1	8 / 2	7.1 x 21	1	1.6 / 0.4	53	1.1
DH.0.DEH.02003	2	4 / 1	7.1 x 21	2	1.6 / 0.4	58	2.2

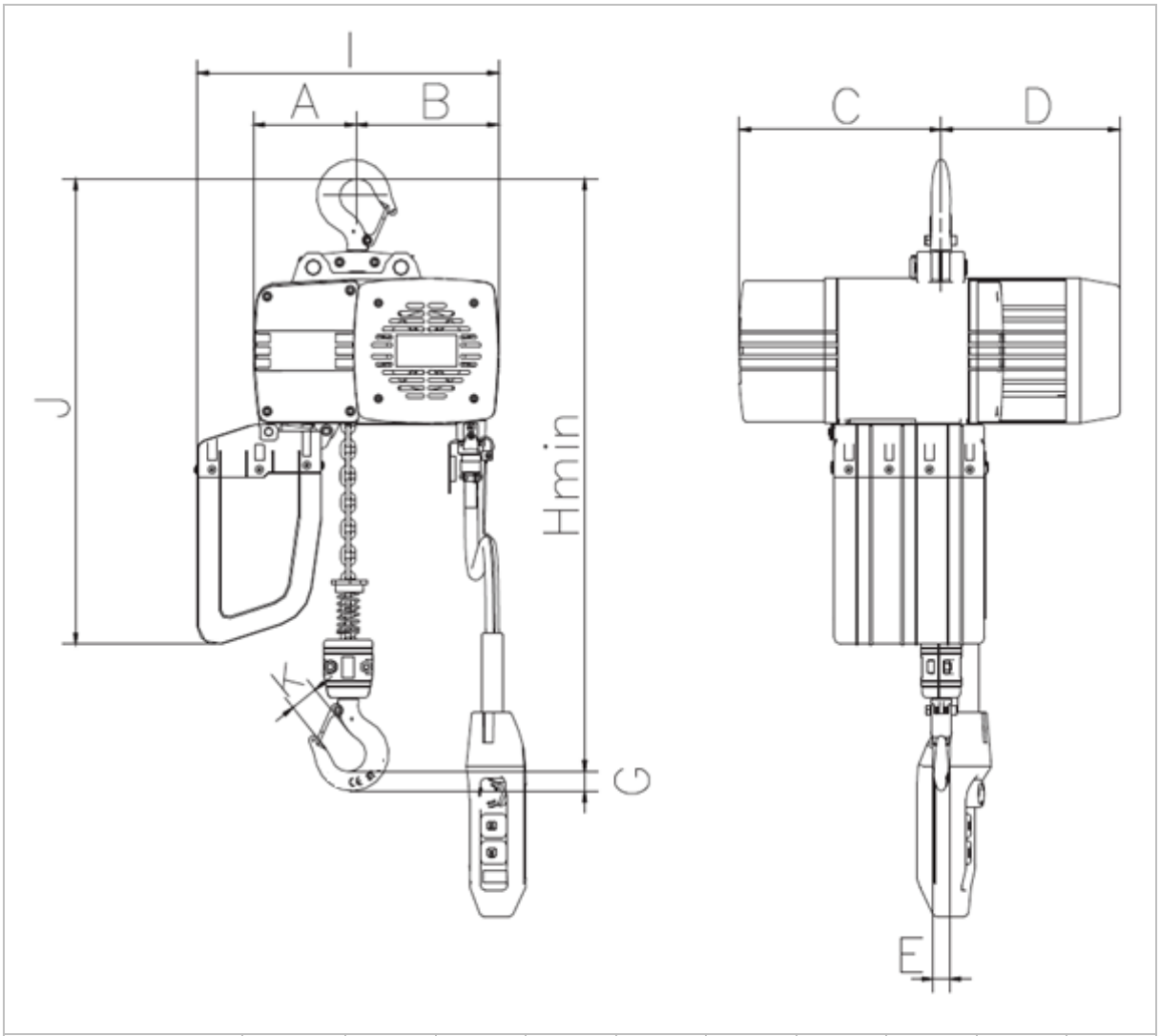

Article code	WLL (ton)	A	B	C	D	E	G	I	J	K
DH.0.DEH.001253	0,125	114	123	211	228	18	20	293	444	23
DH.0.DEH.02503	0.25	114	123	211	228	18	20	293	444	23
DH.0.DEH.00503	0.5	118	162	231	204	18	22	343	530	27
DH.0.DEH.01003	1	128	187	264	245	20	25	405	574	31
DH.0.DEH.02003	2	150	165	264	245	26	42	405	596	38

Article code	H min
DH.0.DEH.001253	420
DH.0.DEH.02503	420
DH.0.DEH.00503	465
DH.0.DEH.01003	575
DH.0.DEH.02003	690

3.2.2 DELTA® electric chain hoist with trolley specifications

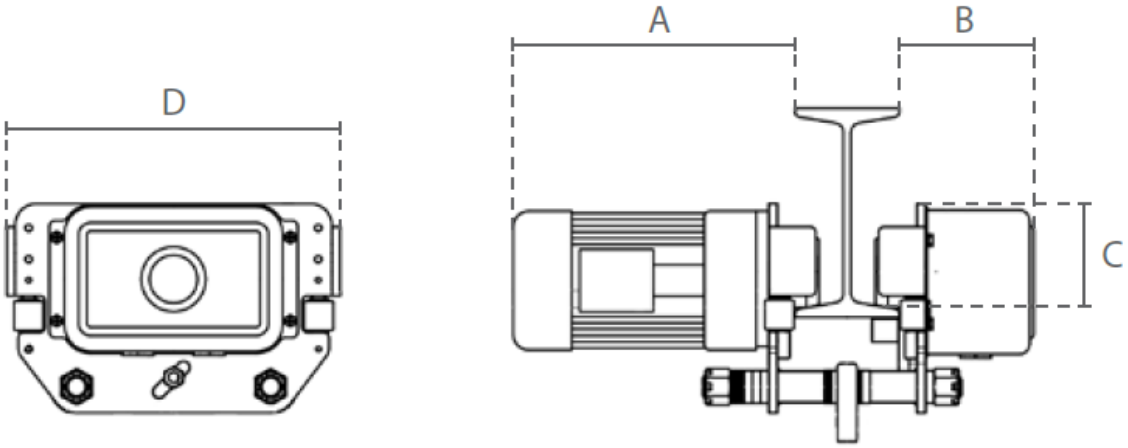

Article code	WLL (ton)	Min. Radius (m)	Wheel Ø (mm)	Nett. weight	A	B	C	D
DF.0.DET.0125	0,125	/	68	33	336	131	97	56
DF.0.DET.0252	0.25	/	68	33	336	131	97	56
DF.0.DET.0502	0.5	/	68	33	336	131	97	56
DF.0.DET.1002	1	/	68	33	336	131	97	56
DF.0.DET.2002	2	/	75	40	338	132	112.5	56

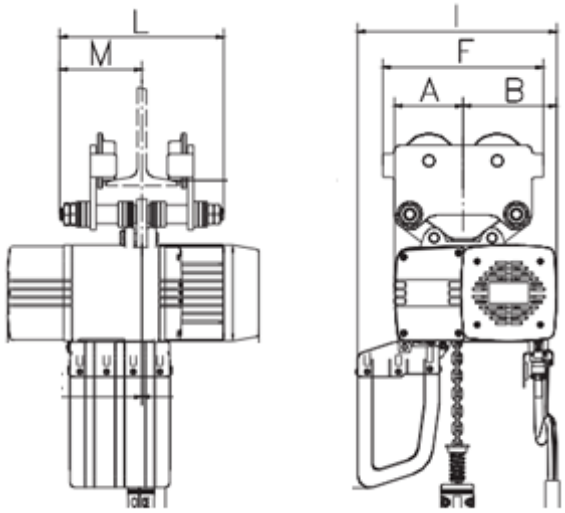

Article code	WLL (ton)	Min. Radius (m)	Wheel Ø (mm)	Nett. weight	A	B	M	F	I	L
DF.0.02600125	0,125	1	58	7	114	123	139	238	293	276
DF.0.02600250	0.25	1	58	7	114	123	139	238	293	276
DF.0.02600500	0.5	1	58	7	118	162	139	238	343	276
DF.0.02601000	1	1	75	7	128	187	141.5	273	405	283
DF.0.02602000	2	1,5	90	12	150	165	147.5	303	405	295

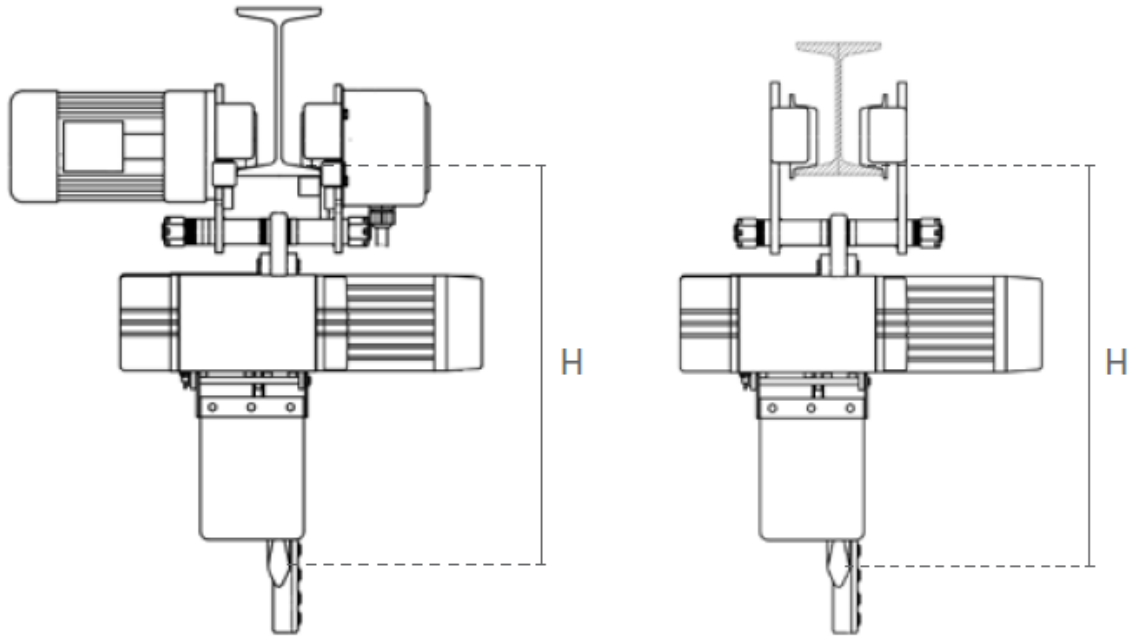

Article code	Capacity (ton)	Traversing speed trolley (m/min)	Power output trolley	Beam width (mm)	Nett. Weight	Min. Height (H)
DH.0.DED.001253	0.125	20/6.7	0.2/0.07	74-300	47	438
DH.0.DED.002503	0.25	20/6.7	0.2/0.07	74-300	47	438
DH.0.DED.00503	0.5	20/6.7	0.2/0.07	74-300	58	480
DH.0.DED.01003	1	20/6.7	0.2/0.07	74-300	77	578
DH.0.DED.02003	2	20/6.7	0.4/0.13	74-300	83	670
DH.0.DEY.001253	0,125	-	-	68-305	36	420
DH.0.DEY.00253	0.25	-	-	68-305	36	420
DH.0.DEY.00503	0.5	-	-	68-305	47	463
DH.0.DEY.01003	1	-	-	68-305	67	559
DH.0.DEY.02003	2	-	-	72-305	78	652

3.3 Main Characteristics

- This DELTA® hoist has overload limit mechanism, which is set by an adjustable slipping clutch.
- The bottom hook has self-lock safety latch mechanism; it could prevent the rigging to slide.
- The electric motor has thermal heat sensor, when the electric motor temperature is too high this mechanism cut down the motor in order to protect it from burning out.
- The DELTA® hoist has a upper and lower limit switch.
- The DELTA® hoist has an emergency stop button, which cuts down the power when used in an extremely dangerous situation.

3.4 Machine classification and period of use

Identify the normal use of the product, in order to ensure the safety and service life. DELTA® electric chain hoist is suitable for the ISO/JIS and FEM classification.

3.4.1 ISO/JIS Classification

		Average Daily Operating Time (Hour)							
Load Spectrum	**Cubic Mean Value**	≤0.12	≤0.25	≤0.5	≤1	≤2	≤4	≤8	≤16
Light	K ≤ 0.125	/	/	M1	M2	M3	M4	M5	M6
Moderate	0.125 < K ≤ 0.25	/	M1	M2	M3	M4	M5	M6	/
Heavy	0.25< K ≤ 0.50	M1	M2	M3	M4	M5	M6	/	1
Very Heavy	0.50< K ≤ 1.00	M2	M3	M4	M5	M6	/	1	1

3.4.2. Fem Classification

		Average Daily Operating Time (Hour)							
Load Spectrum	**Cubic Mean Value**	≤0.12	≤0.25	≤0.5	≤1	≤2	≤4	≤8	≤16
L1	K ≤ 0.5	/	/	1Dm	1Cm	1Bm	1Am	2m	3m
L2	0.50<K ≤ 0.63	/	1 Dm	1Cm	1Bm	1Am	2m	3m	4m
L3	0_63<K ≤ 0.80	1Dm	1Cm	1Bm	1Am	2m	3m	4m	5m
L4	0.80<K ≤ 1.00	1Cm	1Bm	1Am	2m	3m	4m	5m	/

4. Safe operation

4.1 Declaration

Exceeding the rated capacity of the hoist will lead to dangerous situations. Before operation, please read all the contents of this manual, please make sure that you understand all items, if so then you may operate the electric chain hoist. Before operating the hoist, please make sure the work space, structures meet all the safety requirements. Also the capacity must be at even or higher as the rated WLL. Also adhere to any standard or rules which applies. Always use common sense and make sure that hoisting procedure is followed closely when hoist is put in use. Always keep an eye and the load and its environment.

4.2 Install and test

Put the hoist into a reliable frame, and make sure that the power supply is correct, then push the up or down button of the pendant control, observe the hoist for correct functioning, if the hook moves up and down, it means that the connection of electrical wires are correct, if the hook did not move, it means the electrical wire phase is connected wrong, then just switch the two phase wires in the plug , NOT THE EARTH, and the hoist must run correctly.

Installation with electric push trolley: Make sure that the electric trolley fit the beam width, if not, please contact your supplier. Use the washers to adjust the width of the trolley and make sure that the wheel are completely resting on the beam. After adjusting, make sure that the nuts are tightened and put the anti-release cotter pin in place. The distance between the wheel end surface and the beam flange should be 3-5mm, otherwise use the adjustment washer to fit it properly. The gap between the balance device and the bottom of rail must be 1 mm. Install the flat and spring washers and the tighten the nut after adjustment.

4.3 Test before operating

Before operation of the hoist, always test it for correct functioning without load. If it runs normally, hoist may be used with load.

4.4. Inspection

To ensure continuous and satisfied functioning of the hoist, it must be inspected on a regular basis. Let professionals inspect the hoist and change any broken parts if needed, to prevent potential danger.

The inspection interval is determined by the usage and must be done regularly. Always check the hoist and load chain for any kind of wear, damage, rust or any other form of damage. This must be taken seriously. Always control key parts and perform test on a regular basis. The inspection type is separated as daily inspection and periodic inspection.

Daily inspection: Before daily use, operator should always perform a visual inspection to prevent any surprises. This must be logged in a logbook.

Periodic Inspection: Check by a professional according to the user work situation.

4.4.1 Daily inspection			
Project	**Method**	**Judge Standard**	**Solution**
Label, Warning Markings	Visual inspection	Markings must be clearly readable and attached firmly on the hoist.	Change
Pendant control	Visual inspection	May not be damaged	Change
	Push emergency button without load	Hoist must stop directly, after pushing it, hoist must be able to run again.	Change
	Push start (up/down) button without load	Hoist must be able to lift and lower load.	Change or repair
Brake	Lift load 3 times without load	Make sure that the brake keeps the load.	Change or repair
Up / Down limiter	Operate the hook towards limiter positions.	When touching the limiters, hoist must stop.	Change or repair
Lifting chain	Visual inspection	Chain must be lubricated for smooth operation. Chain may not be cracked, deformed or have any other kind of damage.	Clean or lubricate if necessary, replace when needed
Hook	Visual & functioning inspection	May not be deformed, cracked or have any other kind of damage. It must slide and rotate.	Change
Limit spring	Visual inspection	Without deformation.	Change

4.4.2 Periodic inspection

Project	Method	Judge Standard	Solution
Pendant control	Test pendant control for correct functioning up/down, also test the emergency stop, without load	Push button must be in good condition and must work without any problems.	Repair
Power supply	Measure with a volt meter	± 10% of rated voltage	Check the power supply and wires
Earth	Check the earth point	Smaller than 0.1 ohm	Adjust change
Insulation	Measure by Ohm meter	Bigger than 1.5 ohm	Change defect parts
Hoist frame	Visual inspection	Good condition without any cracks and may not be broken	Change
Nameplate	Visual inspection	Load capacity must be clearly visible	Change
Screw	Visual inspection	May not be loose or missed	Fasten or replace
Abnormal operation	Perform test with lifting and lowering goods by using a small load	Should not have abnormal sounds.	Repair
Gear oil	Visual inspection	Should be in accordance with use frequency	Add gear oil or change new oil
Brake	Lift and lower load at full capacity.	Must keep the load when stopped with lifting and slide speed may not be over 1% of lifting speed	Repair
Load limiter	Lift the load and make it slip, but do not slip continuously for more than 5 seconds.	Hoist must be able to slip Hoist can lift rated capacity	Please adjust the limiter. If the limiter fails after debugging. Check and replace the friction disk
Limit switches	Lift the load towards the limiters with rated capacity	Hoist must stop when reached and must be able to move in opposite direction.	Repair or change
Wear on load chain	Measure the load chain. **WARNING:** if the load has signs of wear, please also check the chain guider.		Change

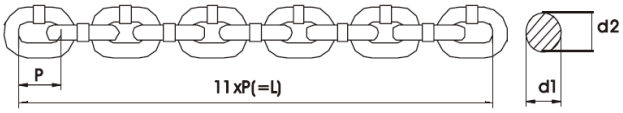

WLL (t)	D = (D1+D2 / 2		L (mm)	
	standard	rejected	standard	rejected
0.125	4	≤ 3.6	132	≤ 134
0.25	4	≤ 3.6	132	≤ 134
0.5	5	≤ 4.5	165	≤ 167.5
1.0	7.1	≤ 6.4	231	≤ 234.5
2.0	7.1	≤ 6.4	231	≤ 234.5

Deformation on load chain	Visual inspection	Without deformation Without deep scratches	Change

Welding scars on load chain	Visual inspection	**WARNING:** without welding scars	Change
Rust on load chain	Visual inspection	**WARNING:** Without obvious rust signs, lubricate load chain with lubricating grease	Change

Hook 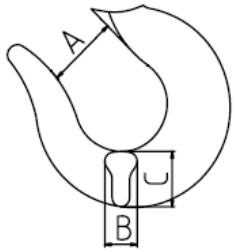	Measure the hook dimensions **WARNING: these values are standard values, because these sizes are also subject to a tolerance rage. At purchase you can measure the sizes and set this as standard value. This will be the basis for future war measurement.**					Change
	First size		Rejected standard			
	A , B, C		More than 5% decrease of measured size			
	WLL (t)	A * (mm)	B (mm)		C (mm)	
		Normal	Standard	Rejected	Standard	Rejected
	0,125	45	18	≤ 17.1	19,5	≤ 18.5
	0.25	45	18	≤ 17.1	19,5	≤ 18.5
	0.5	50	18	≤ 17.1	21	≤ 19.95
	1.0	60	20	≤ 19.0	24	≤ 22.80
	2.0	70	26	≤ 24.7	42	≤ 39.90
Hook deformation	Visual inspection		Without obvious deformation or cracks. Without deep scratches and welding scars. Screw and bolt may not be loose.			Change
Hook rotation	Visual inspection		Hook should rotate normally.			Change
Hook	Visual and functional inspection		Safety latch and hook pin should be attached.			Change
Safety latch	Visual and functional inspection		**WARNING:** Must work normally and safety latch may not be missing and may not be use without.			Change
CAUTION	Add no 1 lithium base grease to all bearing when maintenance is performed.					
CAUTION	Check whether there is enough gearbox oil, if necessary refill with L-CKD-100 gearbox oil.					
CAUTION	Inspection must be carried out by professionals and the hoist always needs to be re-tested to ensure safe working conditions.					
WARNING	Forbidden to use non DELTA® spare parts or load chain.					

5. Installation

5.1 Pre installation check

CAUTION	Check DELTA® electric chain hoist / trolley for transit damage.
WARNING	Check that all fasteners and joints on the DELTA® electric chain hoist are tight and secure.
WARNING	Always make sure that the capacity of the bottom hooks corresponds with the DELTA® electric chain hoist.
WARNING	Always check and inspect the load chain on wear, corrosion or any other type of damage. If detected, please put the DELTA® electric chain hoist out of use. A professional must replace the load before any further use.
CAUTION	Check that all external wiring is in good order.
WARNING	Always check the weight of load and make sure that it does not exceed the safe working load of DELTA® electric chain hoist.
CAUTION	Inspect the engine (chamber), it needs to be clean and dry. Also make sure that the DELTA® electric chain hoist is protected against any form of humidity.

5.2 Suspension point & upper hook of DELTA® electric chain hoist

DANGER	The suspension point should be of correct size and have enough capacity to hold the maximum safe working load of the DELTA® electric chain hoist. It is always recommended to include a generous safety factor. The middle part of the top hook must properly rest on the suspension point, otherwise the chain hoist will not work properly. Always let a professional technician examine the situation.

5.3 Installation DELTA® electric chain hoist with trolley

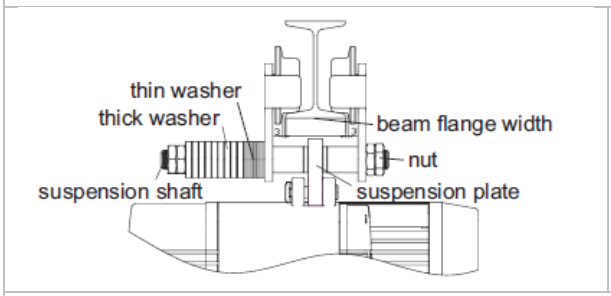

PUSH

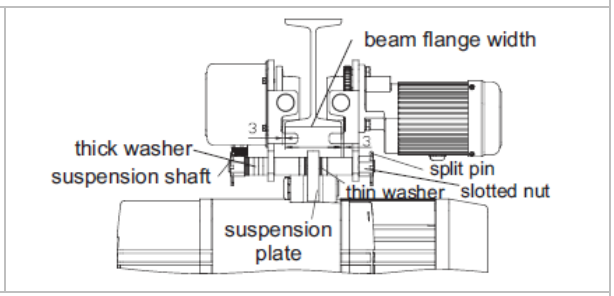

ELECTRIC

The suspension rail of DELTA®electric trolley are divided into I-beam and H-beam, the adjustment range are mentioned in the technical details. If the beam exceed the standard range, please contact your dealer.

The distance between the wheel end surface and the beam flange should be 3-5mm, otherwise use the adjustment washer to fit it properly.When the DELTA® "electric" trolley is installed on the rail, the gap between the balancing device and beam should be about 1mm, use the washers to adjust. Tighten the nuts after adjustment, and put the anti-release cotter pin into place.

When installing a trolley, make sure that the rails are properly earthed and that the contact surface (rail to wheel) is clean in order to minimise resistance. When DELTA® trolley is running on the beam, no debris, welding scars or grease may impact the functioning, this is strictly prohibited. The beam of should meet the following requirements: slope ≤ 1/500, do not exceed the rated capacity of the trolley.

DANGER	Do not exceed the rated capacity of the trolley.
DANGER	The trolley must be put into use under the condition of reliable grounding.
DANGER	Wheels should rest sufficiently on the beam. Get advice from a professional.
DANGER	Make sure that the end stops are placed on both sides of the beam.

5.4 Initial lubrication	
The following lubrication guidelines must be carried out before the electric chain hoist is put into use.	
CAUTION	Load Chain: the full length of chain must be lubricated; including its contacting part with the Chain Wheel(s)/ Guiders. Ensure that the contact points between the Links(i.e. Chain saddles) are adequately lubricated.
CAUTION	Gear Box: for ambient temperature of approx.–10℃to +50℃, a gear oil of mm2/S at 40℃ with mild high-pressure additives should be used. Under higher or lower temperatures, the type of oil used should be adapted to the specific conditions.
5.5 Connection to electrical supply	
An adequate electricity supply system is required along the total length of travel(where appropriate). The supply voltage and frequency at which the hoist operates is marked on the motor rating plate. It is Imperative to check before connecting the unit that these figures correspond with those of the supply voltage.	
If you have any further questions, please contact your supplier.	

5.6 Starting	
On completion of installation, but before the DELTA® hoist is put into regular service ,the following procedure should be carried out:	
1.	Isolate the power supply.
2.	Check that all mechanical and electrical joints and connections are tight and secure.
3.	Switch on power supply.
4.	Run light throughout the full extent of DELTA® electric chain hoist and check that the operation is smooth at all times.
5.	Check operation of hoist brake, under both light load and full load conditions.
6	Always the correct functioning of the emergency stop.

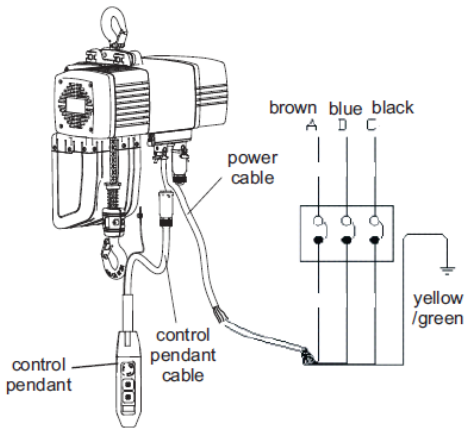

DANGER	**Emergency procedure:** In the event of a blocked chain or any other malfunction of DELTA® electric chain hoist, immediately stop the maneuverer without attempting any further actions. Immediately set up a safety perimeter around the hoist and directly under the load to prevent access by any unauthorized persons. Call in the necessary personnel to remove the load and intervene on the hoist.

6. Operation

6.1 Selection and qualification of operating personnel

For independent operation or maintenance of DELTA® chain hoist, the operator must meet the following requirement:

CAUTION	At least 18 years of age.
WARNING	Mentally and physically capable.
WARNING	Has been instructed in the operation or maintenance of the DELTA® electric chain hoist and have proven their qualification in this aspect(In addition to theoretical training, instruction should also include sufficient practical operating experience as well as acquisition of ability to identify defects which are hazards to safe operation).
WARNING	Can be expected to carry out the work assigned to them reliably. The person in charge must assign operating and maintenance personnel to their relevant tasks.
DANGER	**Emergency procedure:** In the event of a blocked chain or any other malfunction of DELTA® electric chain hoist, immediately stop the maneuverer without attempting any further actions. Immediately set up a safety perimeter around the hoist and directly under the load to prevent access by any unauthorized persons. Call in the necessary personnel to remove the load and intervene on the hoist.

6.2 Operating safety instructions

CAUTION	The DELTA® hoist should be operated only by designated and trained operators.
WARNING	Always wear the necessary protective gear.
WARNING	The operators should not engage in any other practice which will divert his attention while actually engaged in operating the hoist.
CAUTION	If unsafe conditions exist, the operator should have the authority to refuse to handle any loads until safety has been reassured.
DANGER	Always use structures and additional lifting equipment that has the correct safe working load and make sure that a generous safety factor is included.
DANGER	Always make sure that the load does not exceed the rated capacity.
DANGER	For travelling beams / suspension points fitted with warning alarm, this should be sounded each time before travelling; and intermittently during travel particularly when operator or other personnel is approached. If not, the user need is responsible to inform everyone when hoist is operated.
WARNING	Before leaving a hoist unattended, the operator should lower any load onto the floor or onto an appropriate support. An unloaded hook should be raised clear of all passing personnel and traffic.
CAUTION	At the start of each shift, the operator should check the operation of each mode up and down.
WARNING	Avoid slipping the clutch at the top or bottom of DELTA® hoist. The clutch is a protective device and not an operational feature.
WARNING	Repeated slipping of the clutch will reduce the ability of the hoist to sustain the load and may eventually cause the hoist to drop a load..
DANGER	All loads should be securely hitched and properly balanced before a lift is made.
DANGER	Chains, ropes and slings used for lifting should be continually inspected for wear or any other kind of damage that could make them unsafe to work with.

WARNING	The hoisting chain must from a straight line from the load hook to the suspension point before the lift is performed. In the case of travelling hoist the chain must be vertical.
DANGER	Lifting of people or riding on the hook, slings or load is dangerous and strictly prohibited
WARNING	When lifting or travelling, ensure that the load does not have any obstructions.
DANGER	Loads should not pass over the heads of personnel or in any way. This is strictly prohibited, while it endangers the safety.
DANGER	**Emergency procedure:** In the event of a blocked chain or any other malfunction of DELTA® electric chain hoist, immediately stop the maneuverer without attempting any further actions. Immediately set up a safety perimeter around the hoist and directly under the load to prevent access by any unauthorized persons. Call in the necessary personnel to remove the load and intervene on the DELTA® hoist.

7. Maintenance	
7.1 General rules	
Wrong maintenance will lead to human injuries or dangerous accidents, only qualified persons are allowed to maintain the electric chain hoist, if you are not qualified, please contact your dealer.	
CAUTION	Forbidden to use the DELTA® hoist which is under maintenance / service.
CAUTION	If any abnormal behaviour of the hoist is found before, during and after operation, please contact a professional and inspect the hoist.
CAUTION	Don't leave the DELTA® hoist suspended or store it with suspended load.
CAUTION	Clean the hoist from any kind of dirt.
CAUTION	Store the hoist in place where it is clear and dry
WARNING	Please make sure that the load chain is never twisted or knotted.
WARNING	Please maintain the load chain carefully, which includes correct operation, good maintenance and inspection. Never use load chain which has forms of damage.
CAUTION	The load chain is made by special alloy steel, do not weld or refit or repair it in any case.
WARNING	Professionals must inspect and maintain the DELTA® hoist regularly, otherwise, please contact your dealer to inspect and service the hoist.
Daily inspection: Before daily use, operator should always perform a visual inspection to prevent any surprises. This must be logged in a logbook.	
Periodic Inspection: Check by a professional according to the user work situation. This must be logged in a logbook.	
7.2 Lubrication	
CAUTION	Load Chain: the full length of chain must be lubricated; including its contacting part with the Chain Wheel(s)/ Guiders. Ensure that the contact points between the Links(i.e. Chain saddles) are adequately lubricated.
CAUTION	Gear Box: for ambient temperature of approx.–10℃to +50℃, a gear oil of mm2/S at 40℃ with mild high-pressure additives should be used. Under higher or lower temperatures, the type of oil used should be adapted to the specific conditions. Check whether there is enough gearbox oil, if necessary refill with L-CKD-100 gearbox oil.
Make sure to lubricate the parts as lifting chain, hook necks. Lifting chain was important parts of hoist, should use mechanical oil (effect as butter) to lubricate the lifting chain.	

7.3 Setting the slip clutch	
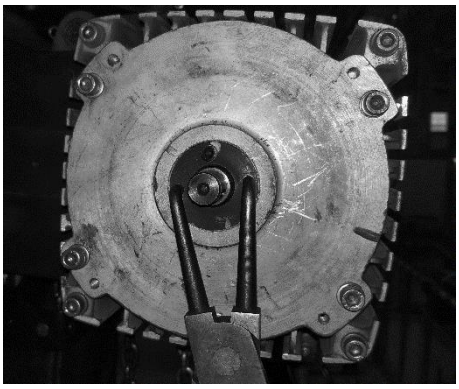	Adjust the limit with a special wrench to adjust the nut and adjust it to 1.3 ~ 1.6 times the rated load (with 1.5 times as appropriate) to minimize the slip time. As the safety clutch is located in the output shaft, the sliding friction will produce a lot of heat after testing it for a long time, which can also damage the friction disc, the correction must be done slow / patiently with the correct value. When you don't succeed, always let the motor cool down and try again, always confirm normal operation. (picture 1） **Attention**: Clockwise rotation adjusting nut, limited load will increase, lifting weight will be increased. Counterclockwise rotation adjusting nut, limited load is reducted , lifting weight will be lower, When lifting heavy objects, the hoist switches from slow to fast, and when it stops it should go from fast to slow.
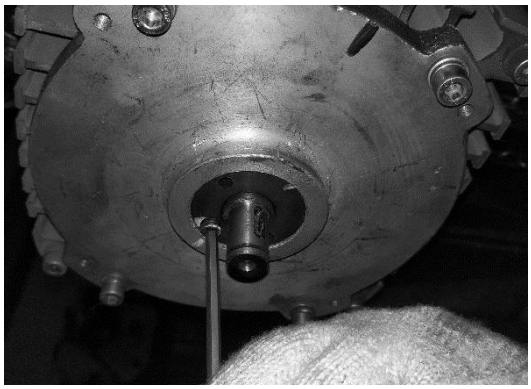	Use the inner hexagon wrench to screw the tightening screw on the nut, which tighten it. (picture 2). **Attention:** The screw must be tightened

7.4 Malfunctions and solutions		
Malfunction	**Cause**	**Solution**
The hoist refuses to operate when everything is installed.	Wires are unconnected or loose. Power is off	Check and fasten all the wire connection points
	Electrical parts are damaged	Replace damaged parts
After releasing the push button on the control, load drops.	Dust or oil on brake disc	Clean the disc
	Severe abrasion of disc	Replace the disc
Chain runs through the hoist, but makes abnormal sound	The chain is not is not lubricated	Lubricate the load chain with oil or grease
	Load guider is broken	Change the load guider
Hoist does not reach normal working speed and engine heats up. (leakage of electricity)	Earth is not good	Ensure good earth connection
	High humidity in air	Do not work in a high humidity environment
	Too many dust on the electrical parts	Keep electrical parts clean
Load slips when lifting load	Load limiter is too flexible	Re-set the down load limiter
DANGER	**Emergency procedure:** In the event of a blocked chain or any other malfunction of DELTA® electric chain hoist, immediately stop the maneuverer without attempting any further actions. Immediately set up a safety perimeter around the hoist and directly under the load to prevent access by any unauthorized persons. Call in the necessary personnel to remove the load and intervene on the hoist.	

8. Spareparts & Diagram / 8.1 Exploded view electric chain hoist [0.25 – 2 ton]

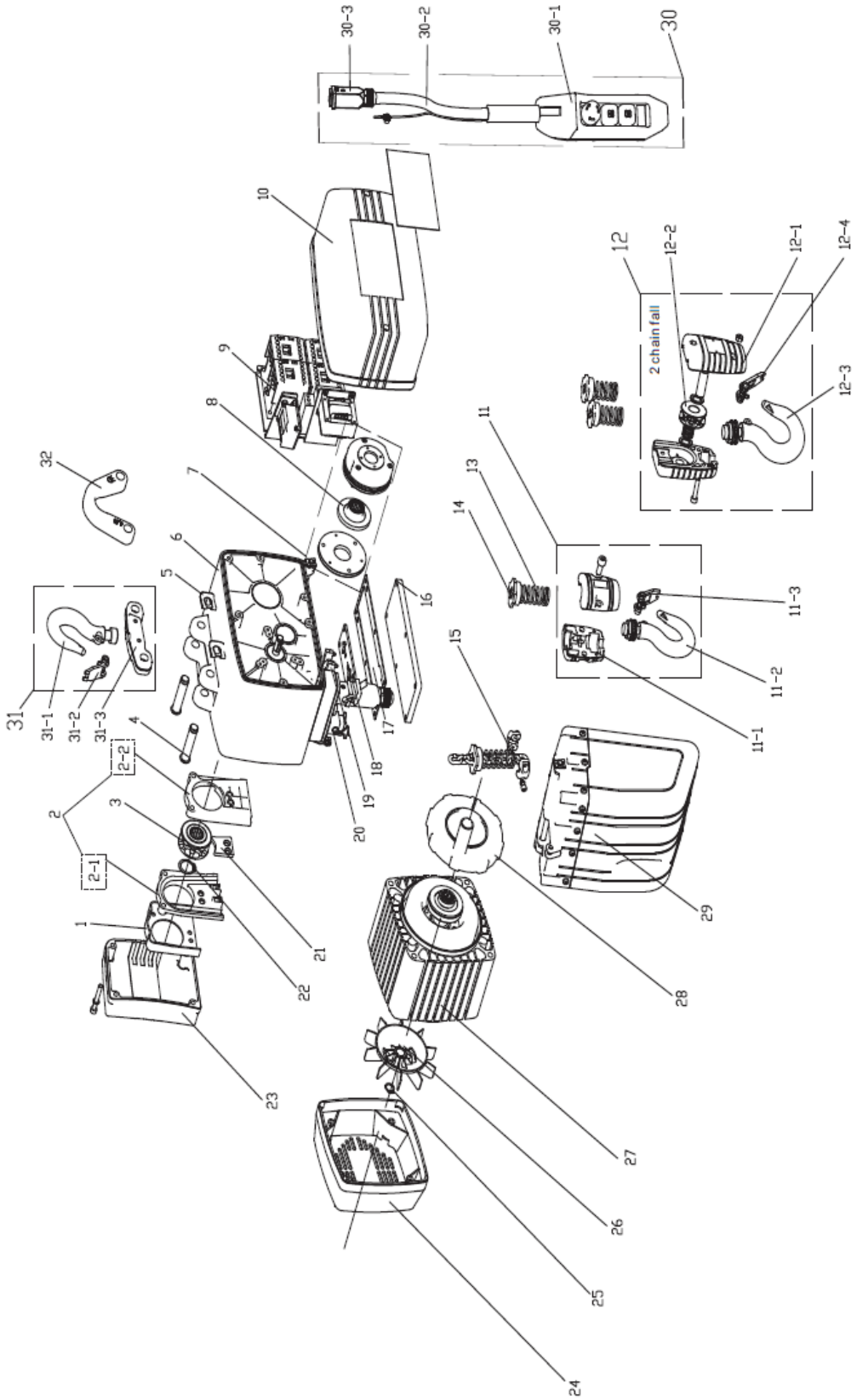

No	Name	No	Name
1	Chain guide cover protective sleeve	24	Fan cover
2	Chain guide cover	25	B Circlip for hole
2-1	A chain guide cover	26	Fan
2-2	B chain guide cover	27	Motor assembly
3	Load sprocket	28	Motor shield
4	Lever pin	29	Load chain bucket assembly
5	Shaft circlip	30	Control pendant assembly
6	Gearbox body	30-1	Control pendant
7	Brake assembly	30-2	Cable
8	Brake disc	30-3	Plug
9	Electrical components	31	Top hook assembly
10	Electrical control cover	31-1	Top hook
11	Bottom hook assembly	31-2	Safety latch assembly
11-1	Bottom hook housing assembly	31-3	Top hook housing
11-2	Bottom hook	32	Bracket suspension plate
11-3	Safety latch assembly		
12	Bottom hook assembly		
12-1	Bottom hook housing assembly		
12-2	Loose roller		
12-3	Bottom hook		
12-4	Safety latch assembly		
13	Limit sping		
14	Limit abutment		
15	Chain limiting plate		
16	Gearbox cover		
17	Gasket		
18	Chain guide supporting plate		
19	Limit switch assembly		
20	Socket		
21	Chain guide protective plate		
22	A circlip for hole		
23	Load sprocket cover		

8.2 Exploded view electric trolley

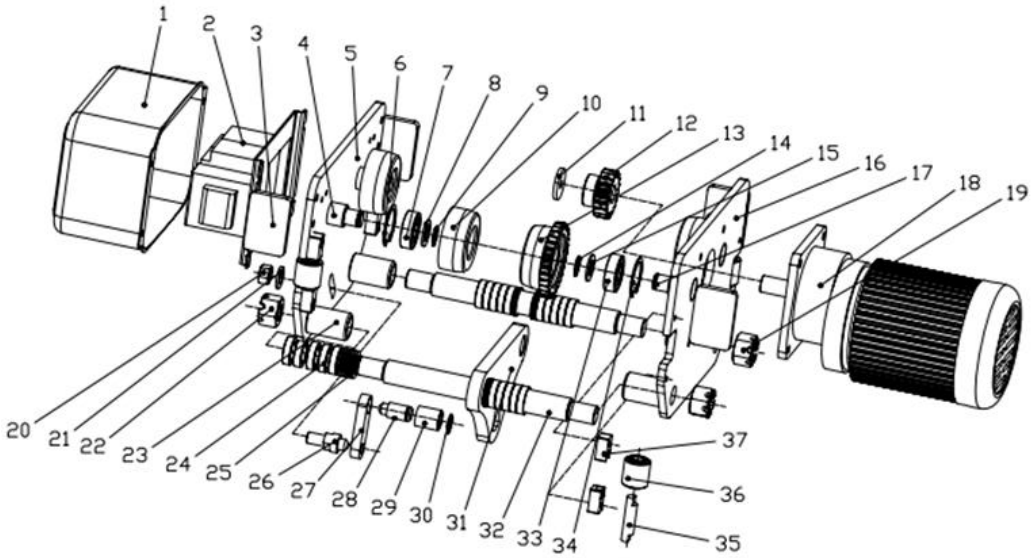

No	Name	No	Name
1	control box	20	locknut
2	electrical compenents	21	flat washer
3	safety block	22	hexagon socket head screw nut
4	wheel shaft	23	bushing
5	right side plate	24	thick washer
6	hole spring	25	thin washer
7	rolling bearing	26	limit switch pin
8	flat washer	27	connect block
9	shaft ring	28	rolling sleeve
10	passive wheel	29	rolling sleeve shaft
11	block	30	shaft ring
12	gear	31	connect plate
13	active wheel	32	hanger
14	shaft ring	33	rolling bearing
15	flat washer	34	hole spring
16	left side plate	35	guider wheel
17	wheel shaft	36	guider wheel shaft
18	gearbox	37	fixed block
19	Hexagon socket head screw		

8.3 Exploded view push trolley

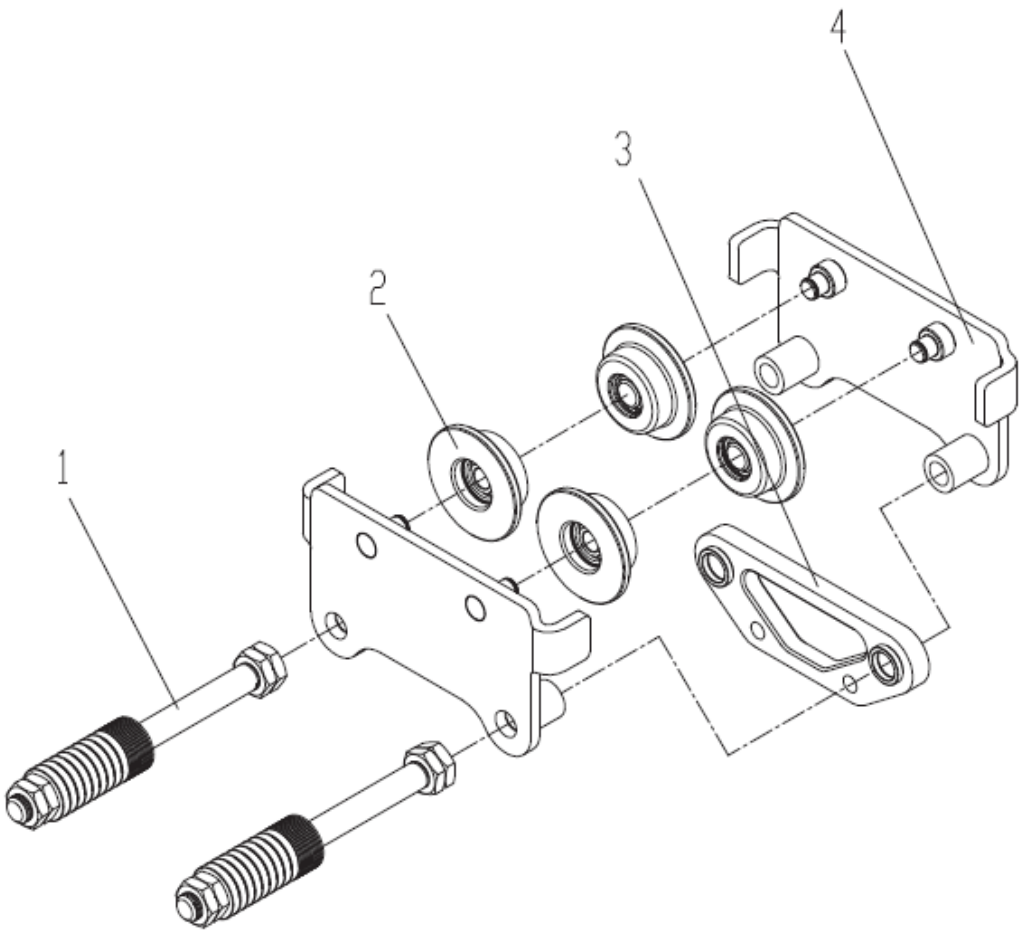

No	Name
1	Suspension shaft assembly
2	Driving wheel assembly
3	Drive wheel side plate
4	Suspension plate

8. 4 Electric scheme

8.4.1 Electric chain hoist with double speed 0,125 & 0,25 ton

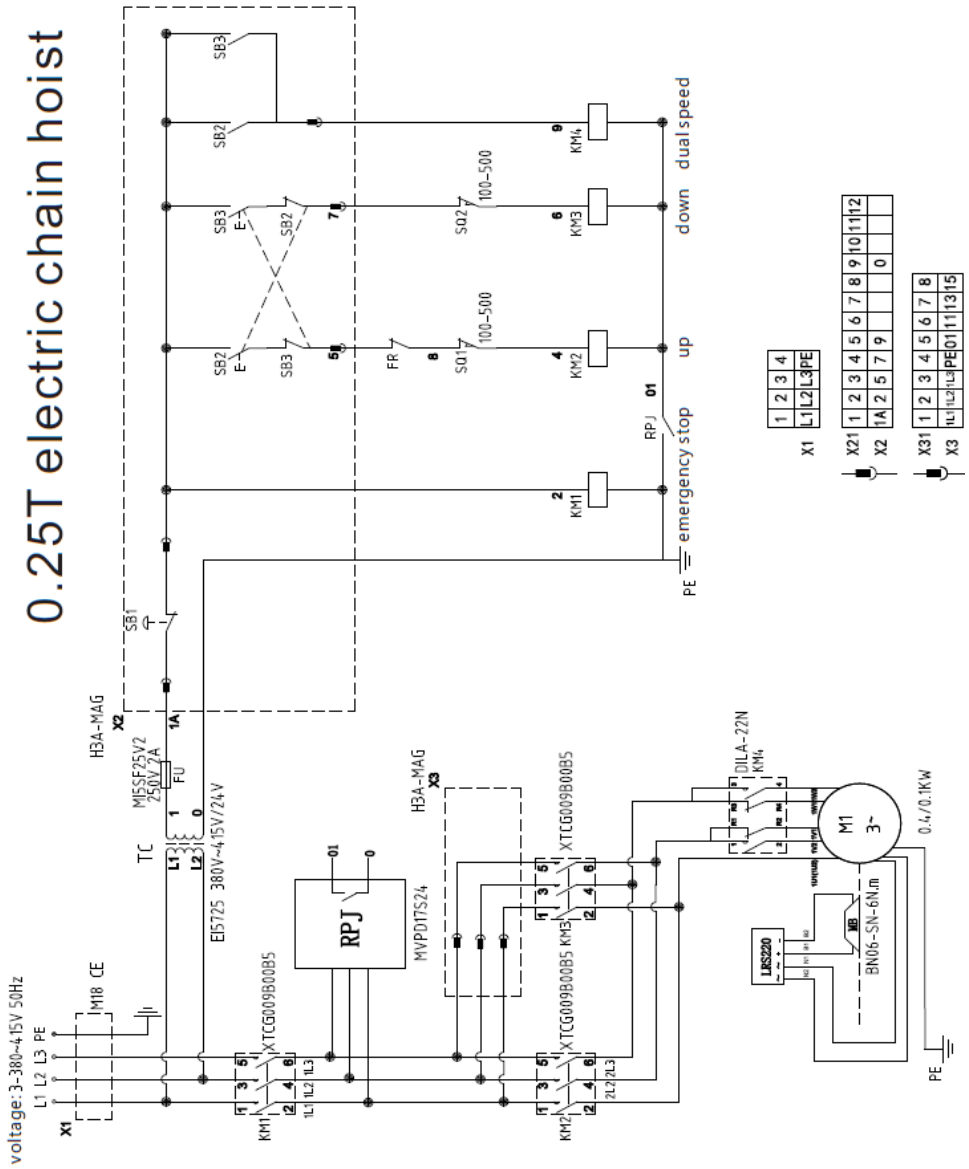

Electric components configuration table	
Part	Description
① TC	transformer
② FR	thermal protector
③ KM~	contactor
④ LRS220	rectifier
⑤ M1	hoist motor
⑥ SQ1	up limit switch
⑦ SQ2	down limit switch
⑧ SB~	button
⑨ X1	waterproof connector
⑩ X2	heavy duty connector X2
⑪ X3	heavy duty connector X3
⑫ RPJ	phase sequence protector
⑬ FU	fuse
⑭ MB	brake

8.4.2 Electric chain hoist with double speed 0,5 ton

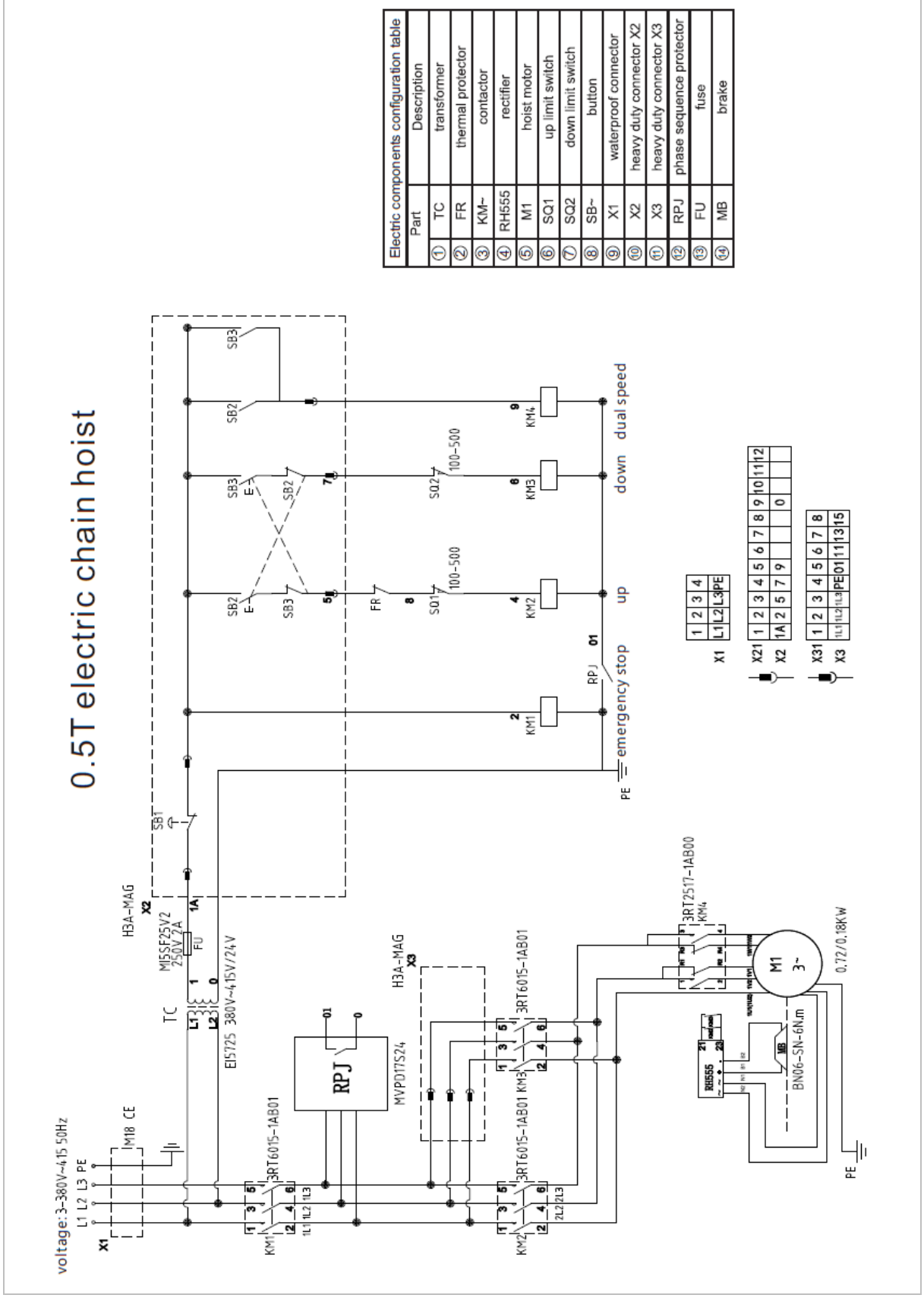

Electric components configuration table		
	Part	Description
①	TC	transformer
②	FR	thermal protector
③	KM~	contactor
④	RH555	rectifier
⑤	M1	hoist motor
⑥	SQ1	up limit switch
⑦	SQ2	down limit switch
⑧	SB~	button
⑨	X1	waterproof connector
⑩	X2	heavy duty connector X2
⑪	X3	heavy duty connector X3
⑫	RPJ	phase sequence protector
⑬	FU	fuse
⑭	MB	brake

8.4.3 Electric chain hoist with double speed 1 & 2 ton

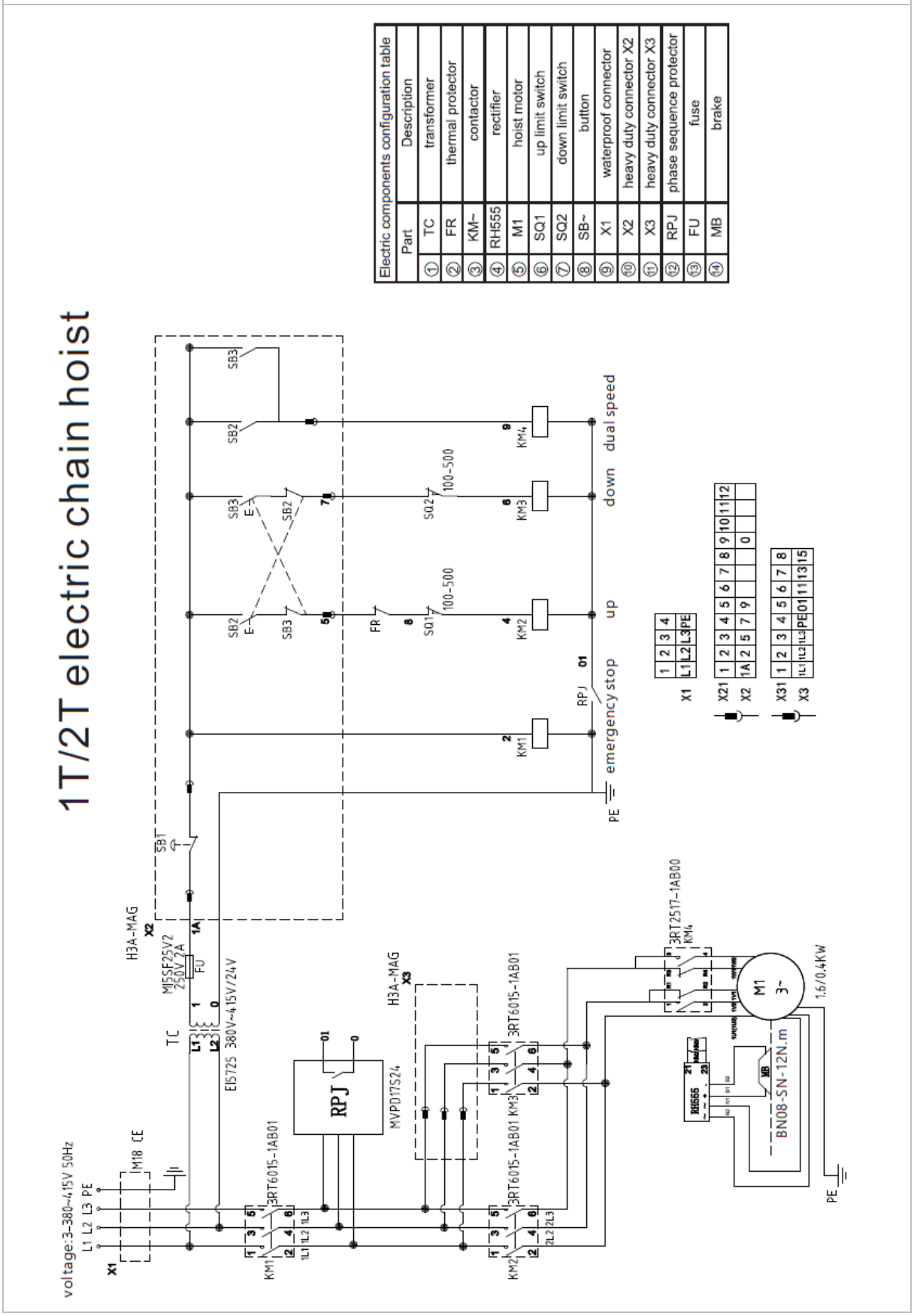

Electric components configuration table	
Part	Description
① TC	transformer
② FR	thermal protector
③ KM~	contactor
④ RH555	rectifier
⑤ M1	hoist motor
⑥ SQ1	up limit switch
⑦ SQ2	down limit switch
⑧ SB~	button
⑨ X1	waterproof connector
⑩ X2	heavy duty connector X2
⑪ X3	heavy duty connector X3
⑫ RPJ	phase sequence protector
⑬ FU	fuse
⑭ MB	brake

8.4.4 Electric chain hoist with electric trolley double speed 0,125 & 0,25 ton

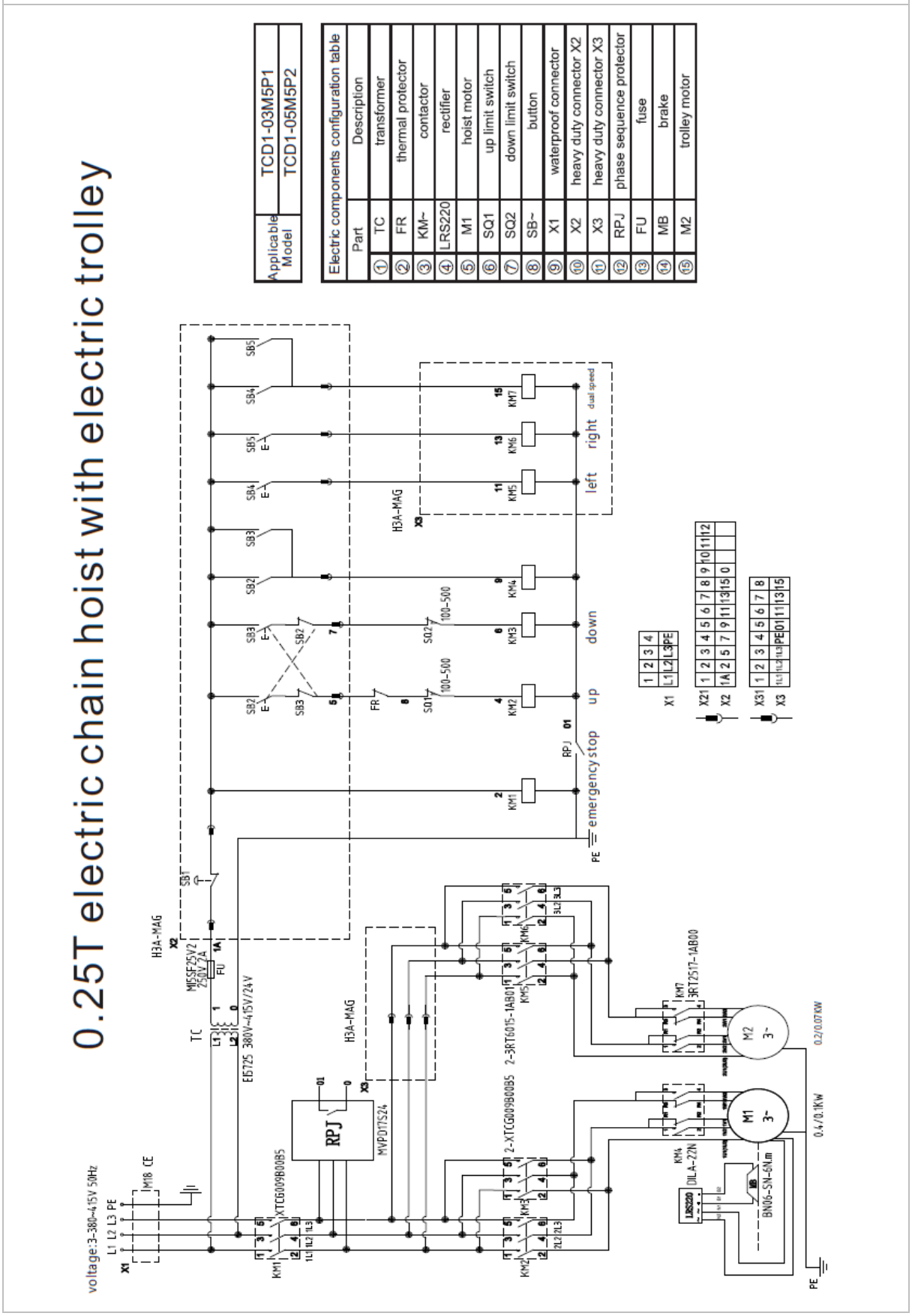

8.4.5 Electric chain hoist with electric trolley double speed 0,5 ton

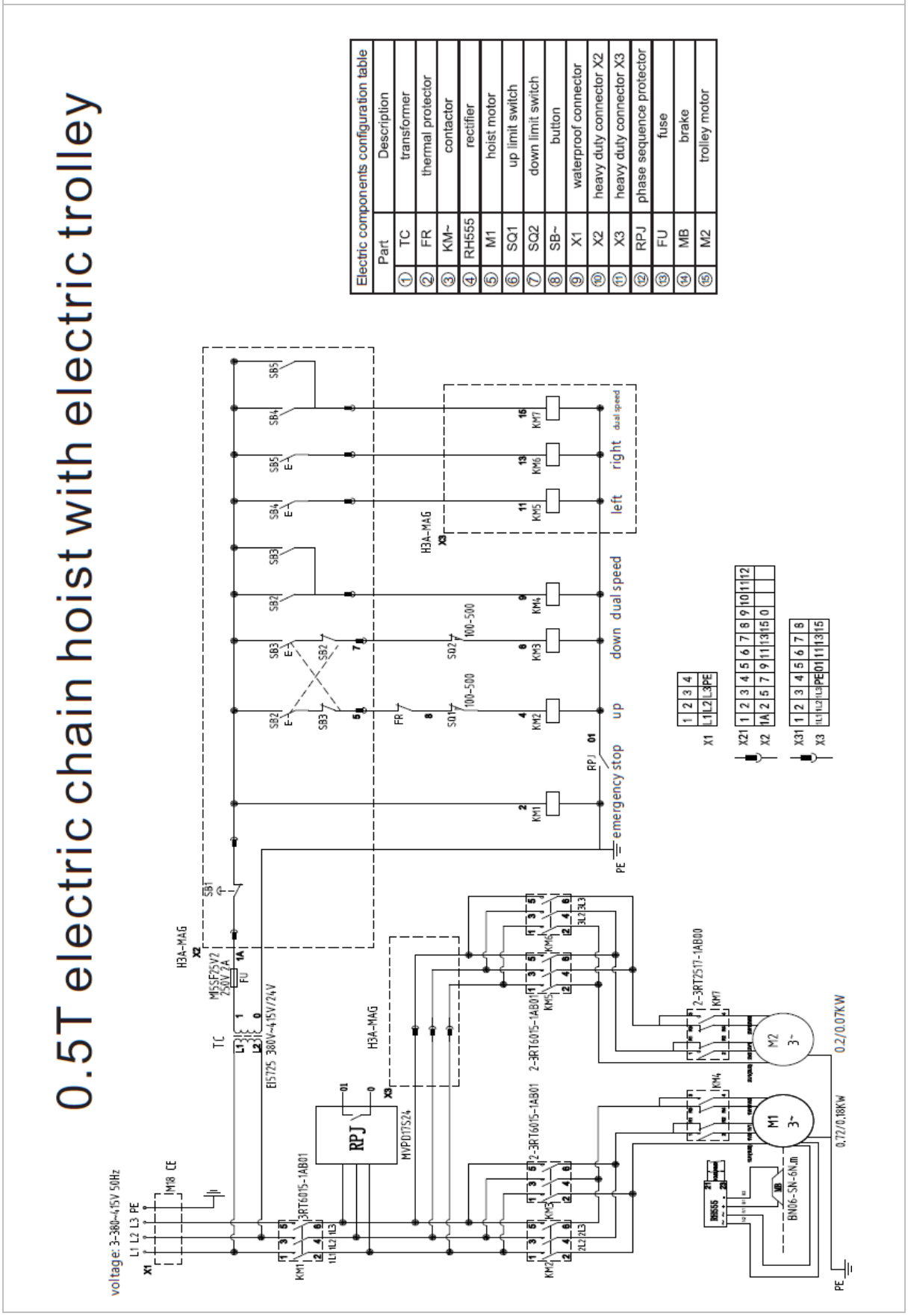

8.4.6 Electric chain hoist with electric trolley double speed 1 & 2 ton

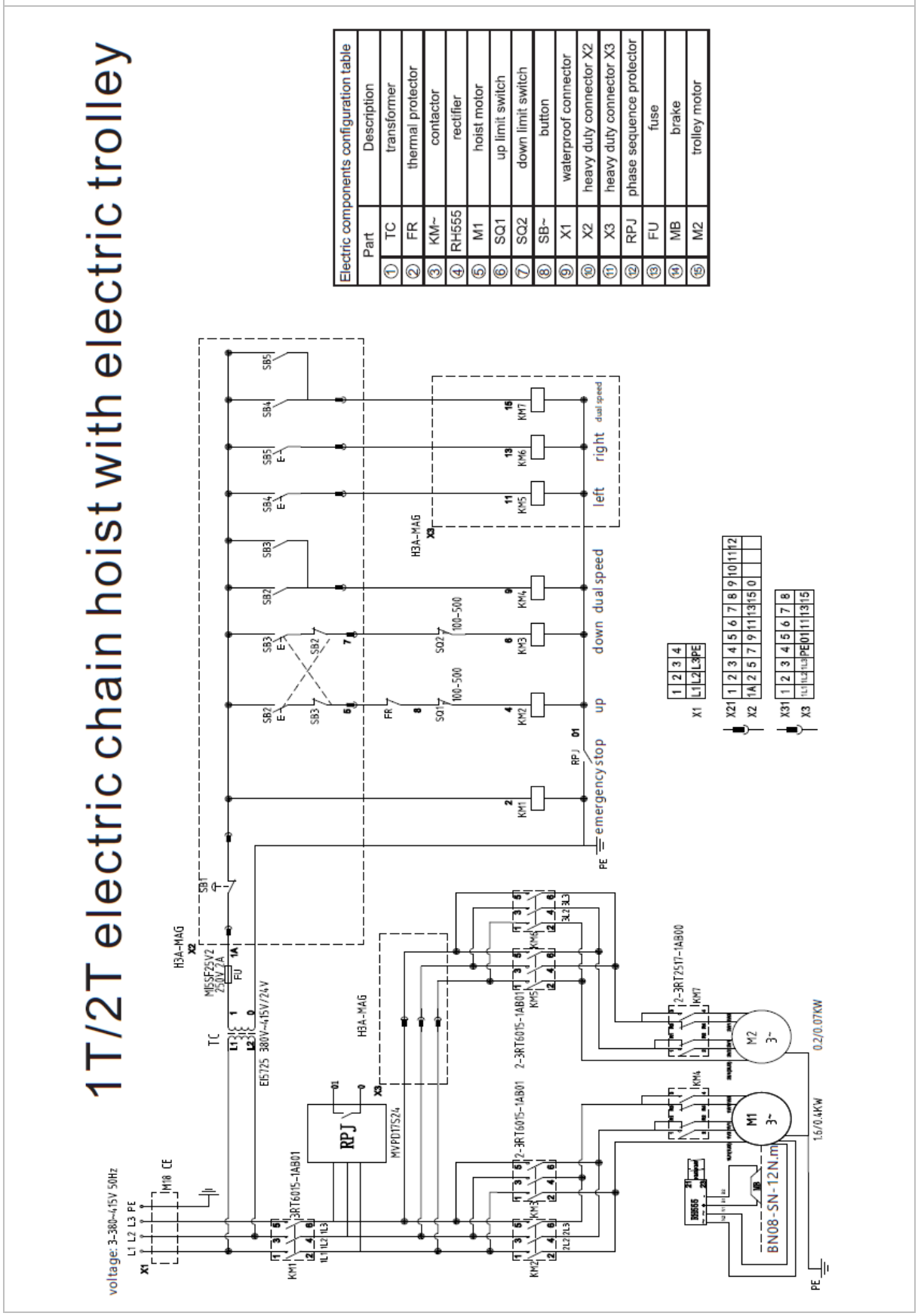

Electric components configuration table	
Part	Description
① TC	transformer
② FR	thermal protector
③ KM~	contactor
④ RH555	rectifier
⑤ M1	hoist motor
⑥ SQ1	up limit switch
⑦ SQ2	down limit switch
⑧ SB~	button
⑨ X1	waterproof connector
⑩ X2	heavy duty connector X2
⑪ X3	heavy duty connector X3
⑫ RPJ	phase sequence protector
⑬ FU	fuse
⑭ MB	brake
⑮ M2	trolley motor

9. Derived certificate of test & Declaration of CE conformity

DELTA®

AFLEID TEST CERTIFICAAT
&
CE CONFORMITEITSVERKLARING

Hiermede verklaren wij dat het hieronder vermelde product zorgvuldig geïnspecteerd en beproefd is en dat de volgende beproeving- en inspectiegegevens overeenstemmen met de specificaties van ons technisch dossier.

Omschrijving :

Model :

Serie nummer :

Max. veilige belasting (S.W.L.) :

Minimum breeklast (M.B.L.) :

Wij verklaren dat het bovengenoemde product in overeenstemming is met de veiligheidsfactor en overige veiligheidseisen van de Europese Machinerichtlijn 2006/42/EC en 2004/108/EC.

DERIVED CERTIFICATE OF TEST
&
DECLARATION OF CE CONFORMITY

This is to certify that the undermentioned product has been thoroughly inspected and tested and that the following data of inspection and test is in conformity with the requirements of our technical file.

: Description

: Type

: Serial number

: Safe Working Load (S.W.L.)

: Minimum Breaking Load (M.B.L.)

We declare that the above-mentioned product is in compliance with the safety factor and further safety requirements in conformity with the European Communities Machinery directive 2006/42/EC and EMC (Electromagnetic compatibility) directive 2004/108/EC.

Handtekening : M.F. STAM
Signed by :

Functie : Directeur
Position : Director

Datum :
Date:

Factuur nummer:
Invoice no.

DELTA HOISTING EQUIPMENT ZAANDAM

DELTA® HOISTING EQUIPMENT

Address:
Uiterdijk 6-7
1505 GW Zaandam
The Netherlands